WallMax®
PRODUCT CATALOGUE

WRFF

WallMax® Rectangular Flanged Frame



WallMax® Rectangular Flanged Frame

WallMax® Rectangular Flanged Frames are metal structures with a 10mm thick flange, and single or multiple openings.
Several combinations of sizes and materials are made available, and customized solutions for cable passages can be developed according to customers' needs.
WRFF are designed for installation through casting in the wall or welding.

Cornice Rettangolare con Flangia WallMax®

Le Cornici Rettangolari con Flangia sono telai in metallo con flangia di spessore 10mm, disponibili con apertura singola o multipla.
I telai WRFF sono disponibili in un'ampia gamma di dimensioni e materiali.
Soluzioni personalizzate possono inoltre essere sviluppate secondo le necessità del cliente.
Le cornici WRFF sono soluzioni di montaggio destinate all'installazione attraverso muratura o saldatura.





WallMax® Rectangular Flanged Frame

WRFF frames are used in combination with WMR series and accessories to create personalized cable transit solutions.
Different combinations of modules can be accommodated, according to customer needs.

Cornice Rettangolare con Flangia WallMax®

L'applicazione delle cornici WRFF si completa con l'utilizzo di moduli e accessori della gamma WMR, che permette di ottenere soluzioni personalizzate per il passaggio dei cavi.
Sono disponibili differenti combinazioni di sigillatura, secondo le esigenze del cliente.

MATERIALS	MATERIALI
Primed Steel	Acciaio con prima mano antiruggine
SS AISI 316 L	Acciaio inox resistente agli acidi
Aluminium	Alluminio
Other materials available upon request	Disponibile in altri materiali su richiesta

DATASHEET PAGE: 158

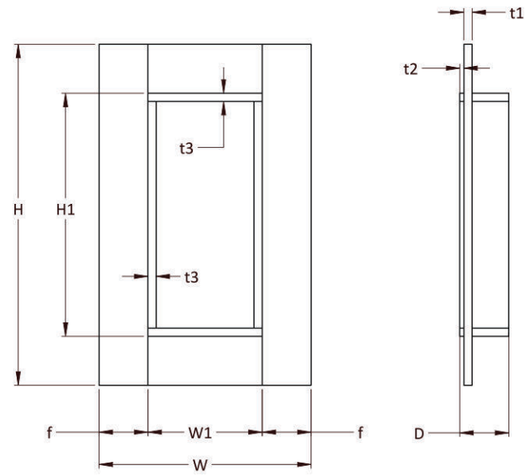

Pos.	(mm)	(inches)
H1	H-120	H-4.252
W1	W-120	W-4.724
D	60	2.362
f	60	2.362
t1	10	0.394
t2	5	0.197
t3	10	0.394

To be used in combination with/utilizzate in combinazione con

WMR series

PICTURE DISEGNO	CODE CODICE	ARTICLE ARTICOLO	OPENINGS APERTURE TELAIO	PACKING SPACE SPAZIO DI RIEMPIMENTO mm	EXTERNAL NOMINAL DIMENSIONS DIMENSIONI ESTERNE NOMINALI HxW (D=60mm) mm	 in	WEIGHT PESO kg	 lb
	71 1010 0611	WRFF 60 1x1 Primed	1x1	60x120	238x260	9.370x10.236	5.77	12.712
	71 1010 0612	WRFF 60 1x2 Primed	1x2	60x120	238x390	9.370x15.354	8.85	19.450
	71 1010 0613	WRFF 60 1x3 Primed	1x3	60x120	238x520	9.370x20.472	11.93	26.290
	71 1010 0614	WRFF 60 1x4 Primed	1x4	60x120	238x650	9.370x25.591	15.00	33.079
	71 1010 0615	WRFF 60 1x5 Primed	1x5	60x120	238x780	9.370x30.709	18.08	39.868
	71 1010 0616	WRFF 60 1x6 Primed	1x6	60x120	238x910	9.370x35.827	21.16	46.658
	71 1010 1211	WRFF 120 1x1 Primed	1x1	120x120	298x260	11.732x10.236	6.89	15.188
	71 1010 1212	WRFF 120 1x2 Primed	1x2	120x120	298x390	11.732x15.354	10.25	22.595
	71 1010 1213	WRFF 120 1x3 Primed	1x3	120x120	298x520	11.732x20.472	13.61	30.003
	71 1010 1214	WRFF 120 1x4 Primed	1x4	120x120	298x650	11.732x25.591	16.97	37.410
	71 1010 1215	WRFF120 1x5 Primed	1x5	120x120	298x780	11.732x30.709	20.33	44.818
	71 1010 1216	WRFF 120 1x6 Primed	1x6	120x120	298x910	11.732x35.827	23.69	52.225
	71 1010 1221	WRFF 120 2x1 Primed	2x1	120x120	466x260	18.347x10.236	10.60	23.360
	71 1010 1231	WRFF 120 3x1 Primed	3x1	120x120	630x260	24.803x10.236	14.96	32.975
	71 1010 1811	WRFF 180 1x1 Primed	1x1	180x120	358x260	14.095x10.236	8.01	17.663
	71 1010 1812	WRFF 180 1x2 Primed	1x2	180x120	358x390	14.095x15.354	11.65	25.693
	71 1010 1813	WRFF 180 1x3 Primed	1x3	180x120	358x520	14.095x20.472	15.29	33.717
	71 1010 1814	WRFF 180 1x4 Primed	1x4	180x120	358x650	14.095x25.591	18.94	41.745
	71 1010 1815	WRFF 180 1x5 Primed	1x5	180x120	358x780	14.095x30.709	22.58	49.772
	71 1010 1816	WRFF 180 1x6 Primed	1x6	180x120	358x910	14.095x35.827	26.22	57.799
	71 1010 1821	WRFF 180 2x1 Primed	2x1	180x120	586x260	23.071x10.236	12.84	28.312
	71 1010 1822	WRFF 180 2x2 Primed	2x2	180x120	596x390	23.465x15.354	19.56	43.127
	71 1010 1823	WRFF 180 2x3 Primed	2x3	180x120	596x520	23.465x20.472	25.53	56.293
	71 1010 1824	WRFF 180 2x4 Primed	2x4	180x120	596x650	23.465x25.591	31.88	70.283
	71 1010 1825	WRFF 180 2x5 Primed	2x5	180x120	596x780	23.465x30.709	38.23	84.274
	71 1010 1826	WRFF 180 2x6 Primed	2x6	180x120	596x910	23.465x35.827	44.57	98.264
	71 1010 1827	WRFF 180 2x7 Primed	2x7	180x120	596x1040	23.465x40.945	50.92	112.255
	71 1010 1828	WRFF 180 2x8 Primed	2x8	180x120	596x1170	23.465x46.063	57.26	126.246
	71 1010 1829	WRFF 180 2x9 Primed	2x9	180x120	596x1300	23.465x51.181	63.61	140.236
	71 1010 1820	WRFF 180 2x10 Primed	2x10	180x120	596x1430	23.465x56.299	69.96	154.227

WMR series

PICTURE DISEGNO	CODE CODICE	ARTICLE ARTICOLO	OPENINGS APERTURE TELAIO	PACKING SPACE SPAZIO DI RIEMPIMENTO	EXTERNAL NOMINAL DIMENSIONS DIMENSIONI ESTERNE NOMINALI HxW (D=60mm)		WEIGHT PESO	
				mm	mm	in	kg	lb
	71 1010 1831	WRFF 180 3x1 Primed	3x1	180x120	814x260	32.047x10.236	16.48	36.332
	71 1010 2411	WRFF 240 1X1 Primed	1x1	240x120	418x260	16.457x15.354	9.14	20.139
	71 1010 2412	WRFF 240 1X2 Primed	1x2	240x120	418x390	16.457x20.472	13.06	28.786
	71 1010 2413	WRFF 240 1X3 Primed	1x3	240x120	418x520	16.457x25.591	16.98	37.432
	71 1010 2414	WRFF 240 1X4 Primed	1x4	240x120	418x650	16.457x30.709	20.90	46.079
	71 1010 2415	WRFF 240 1X5 Primed	1x5	240x120	418x780	16.457x35.827	24.82	54.725
	71 1010 2416	WRFF 240 1X6 Primed	1x6	240x120	418x910	16.457x35.827	28.75	63.732
	71 1010 2421	WRFF 240 2X1 Primed	2x1	240x120	706x260	27.795x10.236	15.09	33.263
	71 1010 2422	WRFF 240 2X2 Primed	2x2	240x120	716x390	28.189x20.472	22.37	49.317
	71 1010 2423	WRFF 240 2X3 Primed	2x3	240x120	716x520	28.189x25.591	28.90	63.722
	71 1010 2424	WRFF 240 2X4 Primed	2x4	240x120	716x650	28.189x30.709	35.81	78.952
	71 1010 2425	WRFF 240 2X5 Primed	2x5	240x120	716x780	28.189x30.709	42.72	94.181
	71 1010 2426	WRFF 240 2X6 Primed	2x6	240x120	716x910	28.189x35.827	49.63	109.411
	71 1010 2427	WRFF 240 2X7 Primed	2x7	240x120	716x1040	28.189x40.945	56.54	124.651
	71 1010 2428	WRFF 240 2X8 Primed	2x8	240x120	716x1170	28.189x46.063	63.44	139.870
	71 1010 2429	WRFF 240 2X9 Primed	2x9	240x120	716x1300	28.189x51.181	70.35	155.100
	71 1010 2420	WRFF 240 2X10 Primed	2x10	240x120	716x1430	28.189x56.299	77.26	170.329
	71 1010 2431	WRFF 240 3X1 Primed	3x1	240x120	994x260	39.134x10.236	21.70	47.831
	71 1011 0611	WRFF 60 1x1 AISI 316	1x1	60x120	238x260	9.370x10.236	5.91	13.038
	71 1011 1211	WRFF 120 1x1 AISI 316	1x1	120x120	298x260	11.732x10.236	7.07	15.578
	71 1011 1212	WRFF 120 1x2 AISI 316	1x2	120x120	298x390	11.732x20.472	10.51	23.175
	71 1011 1213	WRFF 120 1x3 AISI 316	1x3	120x120	298x520	11.732x25.591	13.96	30.772
	71 1011 1214	WRFF 120 1x4 AISI 316	1x4	120x120	298x650	11.732x30.709	17.40	38.369
	71 1011 1811	WRFF 180 1x1 AISI 316	1x1	180x120	358x260	14.095x10.236	8.22	18.118
	71 1011 1812	WRFF 180 1x2 AISI 316	1x2	180x120	358x390	14.095x20.472	11.95	26.350
	71 1011 1813	WRFF 180 1x3 AISI 316	1x3	180x120	358x520	14.095x25.591	15.69	34.582
	71 1011 1814	WRFF 180 1x4 AISI 316	1x4	180x120	358x650	14.095x30.709	19.42	42.814
	71 1011 2411	WRFF 240 1X1 AISI 316	1x1	240x120	418x260	16.457x10.236	9.37	20.657
	71 1011 2412	WRFF 240 1X2 AISI 316	1x2	240x120	418x390	16.457x20.472	13.39	29.524
	71 1011 2413	WRFF 240 1X3 AISI 316	1x3	240x120	418x520	16.457x25.591	17.41	38.391
	71 1011 2414	WRFF 240 1X4 AISI 316	1x4	240x120	418x650	16.457x30.709	21.44	47.258

WMR series

PICTURE DISEGNO	CODE CODICE	ARTICLE ARTICOLO	OPENINGS APERTURE TELAIO	PACKING SPACE SPAZIO DI RIEMPIMENTO	EXTERNAL NOMINAL DIMENSIONS DIMENSIONI ESTERNE NOMINALI HxW (D=60mm)		WEIGHT PESO	
				mm	mm	in	kg	lb
	71 1012 0621	WRFF 60 2X1 AL	2x1	60x120	346x260	13.662x10.236	2.89	6.371
	71 1012 1211	WRFF 120 1X1 AL	1x1	120x120	300x260	11.811x10.236	2.39	5.258
	71 1012 1212	WRFF 120 1X2 AL	1x2	120x120	300x390	11.811x15.354	3.55	7.822
	71 1012 1213	WRFF 120 1X3 AL	1x3	120x120	300x520	11.811x20.472	4.71	11.386
	71 1012 1214	WRFF 120 1X4 AL	1x4	120x120	300x650	11.811x25.590	5.87	12.950
	71 1012 1811	WRFF 180 1X1 AL	1x1	180x120	358x260	14.095x10.236	2.77	6.113
	71 1012 1812	WRFF 180 1X2 AL	1x2	180x120	358x390	14.095x15.354	4.03	8.893
	71 1012 1813	WRFF 180 1X3 AL	1x3	180x120	358x520	14.095x20.472	5.29	11.671
	71 1012 1814	WRFF 180 1X4 AL	1x4	180x120	358x650	14.095x25.590	6.56	14.450
	71 1012 2411	WRFF 240 1X1 AL	1x1	240x120	418x260	16.457x10.236	3.16	6.971
	71 1012 2412	WRFF 240 1X2 AL	1x2	240x120	418x390	16.457x15.354	4.52	9.965
	71 1012 2413	WRFF 240 1X3 AL	1x3	240x120	418x520	16.457x20.472	5.88	12.957
	71 1012 2414	WRFF 240 1X4 AL	1x4	240x120	418x650	16.457x25.590	7.24	15.950