WRFR

WallMax® Rectangular Frame Rounded

WallMax® Rectangular Frame Rounded

WallMax® Rectangular Frames Rounded are metal structures with single or multiple openings.
The rounded corners provide greater mechanical strenght and reduce stress concentration and consequently the risk of cracks around the frame.
A large variety of combinations is available in terms of openings, sizes and materials, allowing to satisfy specific customer needs.
WRFR solutions are designed for installation through welding.

Cornice Rettangolare Arrotondata WallMax®

Le Cornici Rettangolari Arrotondate WallMax® sono telai in metallo con aperture singola o multipla.
Gli angoli arrotondati forniscono una maggiore resistenza meccanica e riducono la concentrazione degli sforzi e, di conseguenza, il rischio di crepe attorno alla cornice.
WallMax® offre un'ampia gamma di combinazioni, con la possibilità di personalizzare le cornici sia in termini di numero di aperture che di scelta di materiali.
I telai WRFR sono pensati per soluzioni di installazione tramite saldatura.

WallMax®
PRODUCT CATALOGUE



WallMax® Rectangular Frame Rounded

WRFR2 frames are used in combination with WMR series modules and accessories to achieve customized sealing solutions.
The numerous combinations of openings and packing space allow for development of cable transit solutions specific to customer's needs.

Cornice Rettangolare Arrotondata WallMax®

Le cornici WRFR2 sono utilizzati in combinazione con i moduli e gli accessori della gamma WMR per offrire soluzioni di sigillatura personalizzate.
Sono disponibili varie combinazioni di aperture e dimensioni con le quali si possono ottenere differenti soluzioni di passaggio cavi, a seconda delle specifiche necessità del cliente.

MATERIALS	MATERIALI
Primed Steel	Acciaio con prima mano antiruggine
SS AISI 316 L	Acciaio inox resistente agli acidi
Aluminium	Alluminio
Other materials available upon request	Disponibile in altri materiali su richiesta



DATASHEET PAGE: 156

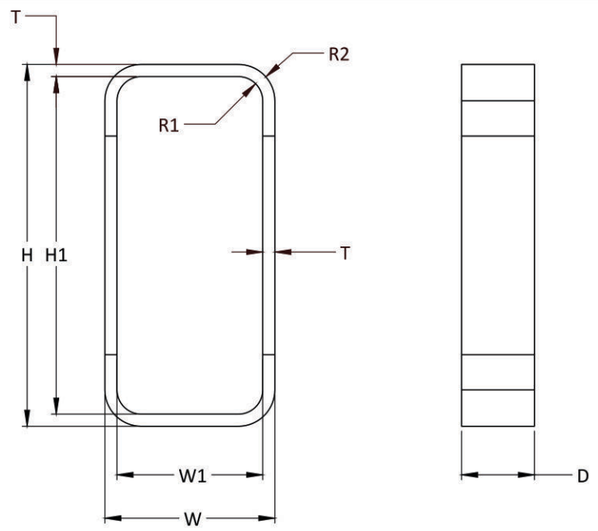

POS	(mm)	(inches)
H1	H-20	H-0.787
W1	W-20	W-0.787
T	10	0.394
D	60	2.362
R1	R20	R0.787
R2	R30	R1.181

To be used in combination with/utilizzate in combinazione con

WMR series

PICTURE DISEGNO	CODE CODICE	ARTICLE ARTICOLO	OPENINGS APERTURE TELAIO	PACKING SPACE SPAZIO DI RIEMPIMENTO mm	EXTERNAL NOMINAL DIMENSIONS DIMENSIONI ESTERNE NOMINALI HxW (D=60mm) mm	 in	WEIGHT PESO kg	 lb
	71 1050 0611	WRFR2 60 1x1 Primed	1x1	60x120	118x140	4.646x5.512	2.03	4.469
	71 1050 0612	WRFR2 60 1x2 Primed	1x2	60x120	118x270	4.646x10.630	3.70	8.157
	71 1050 0613	WRFR2 60 1x3 Primed	1x3	60x120	118x400	4.646x15.748	5.37	11.845
	71 1050 0614	WRFR2 60 1x4 Primed	1x4	60x120	118x530	4.646x20.866	7.05	15.534
	71 1050 0615	WRFR2 60 1x5 Primed	1x5	60x120	118x660	4.646x25.984	8.72	19.222
	71 1050 0616	WRFR2 60 1x6 Primed	1x6	60x120	118x790	4.646x31.102	10.39	22.910
	71 1050 1211	WRFR2 120 1x1 Primed	1x1	120x120	178x140	7.008x5.512	2.28	5.027
	71 1050 1212	WRFR2 120 1x2 Primed	1x2	120x120	178x270	7.008x10.630	4.34	9.575
	71 1050 1213	WRFR2 120 1x3 Primed	1x3	120x120	178x400	7.008x15.748	6.50	14.330
	71 1050 1214	WRFR2 120 1x4 Primed	1x4	120x120	178x530	7.008x20.866	8.61	18.982
	71 1050 1215	WRFR2 120 1x5 Primed	1x5	120x120	178x660	7.008x25.984	10.72	23.634
	71 1050 1216	WRFR2 120 1x6 Primed	1x6	120x120	178x790	7.008x31.102	12.83	28.285
	71 1050 1217	WRFR2 120 1x7 Primed	1x7	120x120	178x920	7.008x36.221	14.94	32.937
	71 1050 1218	WRFR2 120 1x8 Primed	1x8	120x120	178x1050	7.008x41.339	17.05	37.589
	71 1050 1219	WRFR2 120 1x9 Primed	1x9	120x120	178x1180	7.008x46.457	19.16	42.241
	71 1050 1221	WRFR2 120 2x1 Primed	2x1	120x120	346x140	13.622x5.512	4.72	10.410
	71 1050 1222	WRFR2 120 2x2 Primed	2x2	120x120	356x270	14.016x10.630	9.66	21.286
	71 1050 1223	WRFR2 120 2x3 Primed	2x3	120x120	356x400	14.016x15.748	13.76	30.344
	71 1050 1224	WRFR2 120 2x4 Primed	2x4	120x120	356x530	14.016x20.866	18.29	40.312
	71 1050 1225	WRFR2 120 2x5 Primed	2x5	120x120	356x660	14.016x25.984	22.81	50.279
	71 1050 1226	WRFR2 120 2x6 Primed	2x6	120x120	356x790	14.016x31.102	27.33	60.246
	71 1050 1227	WRFR2 120 2x7 Primed	2x7	120x120	356x920	14.016x36.221	31.85	70.213
	71 1050 1228	WRFR2 120 2x8 Primed	2x8	120x120	356x1050	14.016x41.339	36.37	80.180
	71 1050 1231	WRFR2 120 3x1 Primed	3x1	120x120	514x140	20.236x5.512	6.86	15.117
	71 1050 1232	WRFR2 120 3x2 Primed	3x2	120x120	534x270	21.220x10.630	14.69	32.388
	71 1050 1233	WRFR2 120 3x3 Primed	3x3	120x120	534x400	21.220x15.748	20.84	45.944
	71 1050 1234	WRFR2 120 3x4 Primed	3x4	120x120	534x530	21.220x20.866	27.83	61.358
	71 1050 1235	WRFR2 120 3x5 Primed	3x5	120x120	534x660	21.220x25.984	34.82	76.765
	71 1050 1236	WRFR2 120 3x6 Primed	3x6	120x120	534x790	21.220x31.102	41.81	92.175
	71 1050 1811	WRFR2 180 1x1 Primed	1x1	180x120	238x140	9.370x5.512	3.15	6.945
	71 1050 1812	WRFR2 180 1x2 Primed	1x2	180x120	238x270	9.370x10.630	5.47	12.059

WMR series

PICTURE DISEGNO	CODE CODICE	ARTICLE ARTICOLO	OPENINGS APERTURE TELAIO	PACKING SPACE SPAZIO DI RIEMPIMENTO	EXTERNAL NOMINAL DIMENSIONS DIMENSIONI ESTERNE NOMINALI HxW (D=60mm)		WEIGHT PESO	
				mm	mm	in	kg	lb
	71 1050 1813	WRFR2 180 1x3 Primed	1x3	180x120	238x400	9.370x15.748	7.62	16.799
	71 1050 1814	WRFR2 180 1x4 Primed	1x4	180x120	238x530	9.370x20.866	9.86	21.727
	71 1050 1815	WRFR2 180 1x5 Primed	1x5	180x120	238x660	9.370x26.984	12.09	26.654
	71 1050 1816	WRFR2 180 1x6 Primed	1x6	180x120	238x790	9.370x31.102	14.33	31.581
	71 1050 1817	WRFR2 180 1x7 Primed	1x7	180x120	238x920	9.370x36.221	16.56	36.509
	71 1050 1818	WRFR2 180 1x8 Primed	1x8	180x120	238x1050	9.370x41.339	18.80	41.436
	71 1050 1819	WRFR2 180 1x9 Primed	1x9	180x120	238x1180	9.370x46.457	21.03	46.363
	71 1050 1821	WRFR2 180 2x1 Primed	2x1	180x120	466x140	18.347x5.512	5.85	12.888
	71 1050 1822	WRFR2 180 2x2 Primed	2x2	180x120	476x270	18.740x10.630	11.35	25.020
	71 1050 1823	WRFR2 180 2x3 Primed	2x3	180x120	476x400	18.740x15.748	16.01	35.298
	71 1050 1824	WRFR2 180 2x4 Primed	2x4	180x120	476x530	18.740x20.866	21.09	21.094
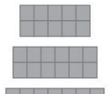	71 1050 1825	WRFR2 180 2x5 Primed	2x5	180x120	476x660	18.740x25.984	26.18	26.176
	71 1050 1826	WRFR2 180 2x6 Primed	2x6	180x120	476x790	18.740x31.102	31.26	31.259
	71 1050 1827	WRFR2 180 2x7 Primed	2x7	180x120	476x920	18.740x36.221	36.34	36.341
	71 1050 1828	WRFR2 180 2x8 Primed	2x8	180x120	476x1050	18.740x41.339	42.42	41.424
	71 1050 1829	WRFR2 180 2x9 Primed	2x9	180x120	476x1180	18.740x46.457	46.51	46.506
	71 1050 1820	WRFR2 180 2x10 Primed	2x10	180x120	476x1310	18.740x51.575	51.59	51.589
	71 1050 1831	WRFR2 180 3x1 Primed	3x1	180x120	694x140	27.323x5.512	8.54	8.541
	71 1050 2411	WRFR2 240 1x1 Primed	1x1	240x120	298x140	11.732x5.512	3.71	8.184
	71 1050 2412	WRFR2 240 1x2 Primed	1x2	240x120	298x270	11.733x10.630	6.23	13.735
	71 1050 2413	WRFR2 240 1x3 Primed	1x3	240x120	298x400	11.732x15.748	8.75	19.290
	71 1050 2414	WRFR2 240 1x4 Primed	1x4	240x120	298x530	11.732x20.866	11.27	24.844
	71 1050 2415	WRFR2 240 1x5 Primed	1x5	240x120	298x660	11.732x25.984	13.79	30.397
	71 1050 2416	WRFR2 240 1x6 Primed	1x6	240x120	298x790	11.732x31.102	16.31	35.951
	71 1050 2421	WRFR2 240 2x1 Primed	2x1	240x120	586x140	23.071x5.512	6.97	15.364
	71 1050 2422	WRFR2 240 2x2 Primed	2x2	240x120	596x270	23.465x10.630	13.03	28.735
	71 1050 2423	WRFR2 240 2x3 Primed	2x3	240x120	596x400	23.465x15.748	18.26	40.250
	71 1050 2424	WRFR2 240 2x4 Primed	2x4	240x120	596x530	23.465x20.866	23.90	52.693
	71 1050 2425	WRFR2 240 2x5 Primed	2x5	240x120	596x660	23.465x25.984	29.55	65.136
	71 1050 2426	WRFR2 240 2x6 Primed	2x6	240x120	596x790	23.465x31.102	35.19	77.578
	71 1050 2427	WRFR2 240 2x7 Primed	2x7	240x120	596x920	23.465x36.221	40.83	90.021

WMR series

PICTURE DISEGNO	CODE CODICE	ARTICLE ARTICOLO	OPENINGS APERTURE TELAIO	PACKING SPACE SPAZIO DI RIEMPIMENTO	EXTERNAL NOMINAL DIMENSIONS DIMENSIONI ESTERNE NOMINALI HxW (D=60mm)		WEIGHT PESO	
				mm	mm	in	kg	lb
	71 1050 2428	WRFR2 240 2x8 Primed	2x8	240x120	596x1050	23.465x41.339	46.48	102.464
	71 1050 2429	WRFR2 240 2x9 Primed	2x9	240x120	596x1180	23.465x46.457	52.12	114.907
	71 1050 2420	WRFR2 240 2x10 Primed	2x10	240x120	596x1310	23.465x51.575	57.77	127.350
	71 1050 2431	WRFR2 240 3x1 Primed	3x1	240x120	874x140	34.409x5.512	10.23	22.544
	71 1051 0611	WRFR2 60 1x1 AISI 316	1x1	60x120	118x140	4.646x5.512	2.08	4.586
	71 1051 0612	WRFR2 60 1x2 AISI 316	1x2	60x120	118x270	4.646x10.630	3.80	8.378
	71 1051 0613	WRFR2 60 1x3 AISI 316	1x3	60x120	118x400	4.646x15.748	5.52	12.170
	71 1051 0614	WRFR2 60 1x4 AISI 316	1x4	60x120	118x530	4.646x20.866	7.24	15.961
	71 1051 0615	WRFR2 60 1x5 AISI 316	1x5	60x120	118x660	4.646x25.984	8.96	19.753
	71 1051 0616	WRFR2 60 1x6 AISI 316	1x6	60x120	118x790	4.646x31.102	10.68	23.545
	71 1051 1211	WRFR2 120 1x1 AISI 316	1x1	120x120	178x140	7.008x5.512	2.65	5.842
	71 1051 1212	WRFR2 120 1x2 AISI 316	1x2	120x120	178x270	7.008x10.630	4.78	10.543
	71 1051 1213	WRFR2 120 1x3 AISI 316	1x3	120x120	178x400	7.008x15.748	6.67	14.705
	71 1051 1214	WRFR2 120 1x4 AISI 316	1x4	120x120	178x530	7.008x20.866	7.24	15.961
	71 1051 1215	WRFR2 120 1x5 AIS I316	1x5	120x120	178x660	7.008x25.984	8.96	19.753
	71 1051 1216	WRFR2 120 1x6 AISI 316	1x6	120x120	178x790	7.008x31.102	10.68	23.545
	71 1051 1221	WRFR2 120 2x1 AISI 316	2x1	120x120	346x140	13.622x5.512	4.84	10.679
	71 1051 1231	WRFR2 120 3x1 AISI 316	3x1	120x120	514x140	20.236x5.512	7.03	15.503
	71 1051 1811	WRFR2 180 1x1 AISI 316	1x1	180x120	238x140	9.370x5.512	3.23	7.121
	71 1051 1812	WRFR2 180 1x2 AISI 316	1x2	180x120	238x270	9.370x10.630	5.53	12.181
	71 1051 1813	WRFR2 180 1x3 AISI 316	1x3	180x120	238x400	9.370x15.748	7.82	17.241
	71 1051 1814	WRFR2 180 1x4 AISI 316	1x4	180x120	238x530	9.370x20.866	10.12	22.300
	71 1051 1815	WRFR2 180 1x5 AISI 316	1x5	180x120	238x660	9.370x26.984	12.41	27.359
	71 1051 1816	WRFR2 180 1x6 AISI 316	1x6	180x120	238x790	9.370x31.102	14.71	32.419
	71 1051 1821	WRFR2 180 2x1 AISI 316	2x1	180x120	466x140	18.347x5.512	6.00	13.219
	71 1051 2411	WRFR2 240 1x1 AISI 316	1x1	240x120	298x140	11.732x5.512	3.81	8.400
	71 1051 2412	WRFR2 240 1x2 AISI 316	1x2	240x120	298x270	11.733x10.630	6.39	14.088
	71 1051 2413	WRFR2 240 1x3 AISI 316	1x3	240x120	298x400	11.732x15.748	8.97	19.775
	71 1051 2414	WRFR2 240 1x4 AISI 316	1x4	240x120	298x530	11.732x20.866	11.55	24.581
	71 1051 2415	WRFR2 240 1x5 AISI 316	1x5	240x120	298x660	11.732x25.984	14.13	31.151
	71 1051 2416	WRFR2 240 1x6 AISI 316	1x6	240x120	298x790	11.732x31.102	16.71	36.839

WMR series

PICTURE DISEGNO	CODE CODICE	ARTICLE ARTICOLO	OPENINGS APERTURE TELAIO	PACKING SPACE SPAZIO DI RIEMPIMENTO mm	EXTERNAL NOMINAL DIMENSIONS DIMENSIONI ESTERNE NOMINALI HxW (D=60mm) mm	 in	WEIGHT PESO kg	 lb
	71 1051 2421	WRFR2 240 2x1 AISI 316	2x1	240x120	586x140	23.071x5.512	7.15	15.759
	71 1051 2431	WRFR2 240 3x1 AISI 316	3x1	240x120	874x140	34.409x5.512	10.49	23.122
	71 1052 0611	WRFR2 60 1x1 AL	1x1	60x120	118x140	4.646x5.512	0.70	1.669
	71 1052 0612	WRFR2 60 1x2 AL	1x2	60x120	118x270	4.646x10.630	1.37	3.020
	71 1052 0613	WRFR2 60 1x3 AL	1x3	60x120	118x400	4.646x15.748	1.98	4.365
	71 1052 0614	WRFR2 60 1x4 AL	1x4	60x120	118x530	4.646x20.866	2.59	5.719
	71 1052 0615	WRFR2 60 1x5 AL	1x5	60x120	118x660	4.646x25.984	3.21	7.070
	71 1052 0616	WRFR2 60 1x6 AL	1x6	60x120	118x790	4.646x31.102	3.82	8.424
	71 1052 0621	WRFR2 60 2x1 AL	2x1	60x120	226x140	9.134x5.512	1.25	2.747
	71 1052 0631	WRFR2 60 3x1 AL	3x1	60x120	334x140	13.504x5.512	1.79	3.946
	71 1052 1211	WRFR2 120 1x1 AL	1x1	120x120	178x140	7.008x5.512	0.90	1.984
	71 1052 1212	WRFR2 120 1x2 AL	1x2	120x120	178x270	7.008x10.630	1.58	3.472
	71 1052 1213	WRFR2 120 1x3 AL	1x3	120x120	178x400	7.008x15.748	2.25	4.960
	71 1052 1214	WRFR2 120 1x4 AL	1x4	120x120	178x530	7.008x20.866	2.93	6.449
	71 1052 1215	WRFR2 120 1x5 AL	1x5	120x120	178x660	7.008x25.984	3.60	7.937
	71 1052 1216	WRFR2 120 1x6 AL	1x6	120x120	178x790	7.008x31.102	4.28	9.425
	71 1052 1221	WRFR2 120 2x1 AL	2x1	120x120	346x140	13.622x5.512	1.64	3.604
	71 1052 1222	WRFR2 120 2x2 AL	2x2	120x120	356x270	14.016x10.630	3.35	7.374
	71 1052 1223	WRFR2 120 2x3 AL	2x3	120x120	356x400	14.016x15.748	4.77	10.505
	71 1052 1224	WRFR2 120 2x4 AL	2x4	120x120	356x530	14.016x20.866	6.33	13.955
	71 1052 1231	WRFR2 120 3x1 AL	3x1	120x120	514x140	20.236x5.512	7.90	17.406
	71 1052 1811	WRFR2 180 1x1 AL	1x1	180x120	238x140	9.370x5.512	1.09	2.403
	71 1052 1812	WRFR2 180 1x2 AL	1x2	180x120	238x270	9.370x10.630	1.87	4.112
	71 1052 1813	WRFR2 180 1x3 AL	1x3	180x120	238x400	9.370x15.748	2.64	5.820
	71 1052 1814	WRFR2 180 1x4 AL	1x4	180x120	238x530	9.370x20.866	3.42	7.529
	71 1052 1815	WRFR2 180 1x5 AL	1x5	180x120	238x660	9.370x26.984	4.19	9.237
	71 1052 1816	WRFR2 180 1x6 AL	1x6	180x120	238x790	9.370x31.102	4.97	10.946
	71 1052 1821	WRFR2 180 2x1 AL	2x1	180x120	466x140	18.347x5.512	2.02	4.462
	71 1052 1822	WRFR2 180 2x2 AL	2x2	180x120	476x270	18.740x10.630	3.93	8.662
	71 1052 1823	WRFR2 180 2x3 AL	2x3	180x120	476x400	18.740x15.748	5.54	12.218
	71 1052 1824	WRFR2 180 2x4 AL	2x4	180x120	476x530	18.740x20.866	7.30	16.096

WMR series

PICTURE DISEGNO	CODE CODICE	ARTICLE ARTICOLO	OPENINGS APERTURE TELAIO	PACKING SPACE SPAZIO DI RIEMPIMENTO mm	EXTERNAL NOMINAL DIMENSIONS DIMENSIONI ESTERNE NOMINALI HxW (D=60mm) mm	 in	WEIGHT PESO kg	 lb
	71 1052 1825	WRFR2 180 2x5 AL	2x5	180x120	476x660	18.740x25.984	9.06	19.974
	71 1052 1826	WRFR2 180 2x6 AL	2x6	180x120	476x790	18.740x31.102	10.82	23.852
	71 1052 1831	WRFR2 180 3x1 AL	3x1	180x120	694x140	27.323x5.512	5.03	11.078
	71 1052 2411	WRFR2 240 1x1 AL	1x1	240x120	298x140	11.732x5.512	1.28	2.822
	71 1052 2412	WRFR2 240 1x2 AL	1x2	240x120	298x270	11.733x10.630	2.16	4.762
	71 1052 2413	WRFR2 240 1x3 AL	1x3	240x120	298x400	11.732x15.748	3.03	6.680
	71 1052 2414	WRFR2 240 1x4 AL	1x4	240x120	298x530	11.732x20.866	3.91	8.609
	71 1052 2415	WRFR2 240 1x5 AL	1x5	240x120	298x660	11.732x25.984	4.78	10.538
	71 1052 2416	WRFR2 240 1x6 AL	1x6	240x120	298x790	11.732x31.102	5.66	12.467
	71 1052 2421	WRFR2 240 2x1 AL	2x1	240x120	586x141	23.071x5.512	2.41	5.318
	71 1052 2431	WRFR2 240 3x1 AL	3x1	240x120	874x141	34.409x5.512	3.54	7.804

WallMax® Rectangular Frame Rounded

WRFR4 frames are used in combination with WMR series modules and accessories to achieve customized sealing solutions.
The numerous combinations of openings and packing space allow for development of cable transit solutions specific to customer's needs.

Cornice Rettangolare Arrotondata WallMax®

Le cornici WRFR4 sono utilizzati in combinazione con i moduli e gli accessori della gamma WMR per offrire soluzioni di sigillatura personalizzate.
Sono disponibili varie combinazioni di aperture e dimensioni con le quali si possono ottenere differenti soluzioni di passaggio cavi, a seconda delle specifiche necessità del cliente.

MATERIALS	MATERIALI
Primed Steel	Acciaio con prima mano antiruggine
SS AISI 316 L	Acciaio inox resistente agli acidi
Aluminium	Alluminio
Other materials available upon request	Disponibile in altri materiali su richiesta



DATASHEET PAGE: 157

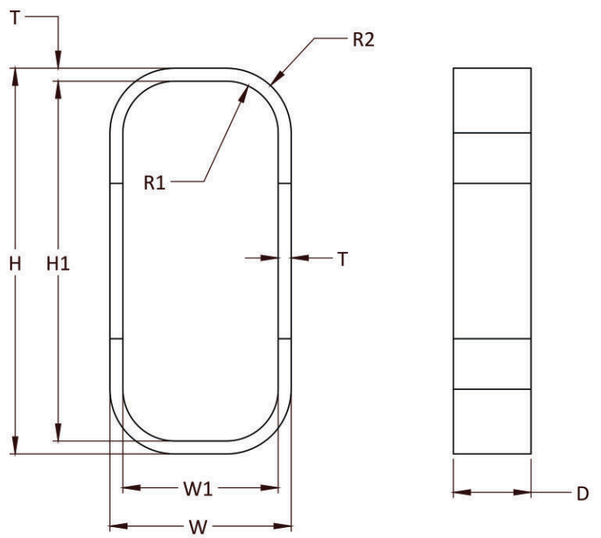

POS	(mm)	(inches)
H1	H-20	H-0.787
W1	W-20	W-0.787
T	10	0.394
D	60	2.362
R1	R40	R1.575
R2	R50	R1.969

To be used in combination with/utilizzate in combinazione con

WMR series

PICTURE / DISEGNO	CODE / CODICE	ARTICLE / ARTICOLO	OPENINGS / APERTURE TELAIO	PACKING SPACE / SPAZIO DI RIEMPIMENTO mm	DIMENSIONI ESTERNE NOMINALI HxW (D=60mm) mm	in	WEIGHT / PESO kg	lb
	71 1060 1211	WRFR4 120 1x1 Primed	1x1	120x120	178x140	7.008x5.512	2.43	5.353
	71 1060 1212	WRFR4 120 1x2 Primed	1x2	120x120	178x270	7.008x10.630	4.38	9.656
	71 1060 1213	WRFR4 120 1x3 Primed	1x3	120x120	178x400	7.008x15.748	6.34	13.977
	71 1060 1214	WRFR4 120 1x4 Primed	1x4	120x120	178x530	7.008x20.866	8.30	18.290
	71 1060 1215	WRFR4 120 1x5 Primed	1x5	120x120	178x660	7.008x25.984	10.25	22.602
	71 1060 1216	WRFR4 120 1x6 Primed	1x6	120x120	178x790	7.008x31.102	12.21	26.914
	71 1060 1217	WRFR4 120 1x7 Primed	1x7	120x120	178x920	7.008x36.221	14.16	31.226
	71 1060 1218	WRFR4 120 1x8 Primed	1x8	120x120	178x1050	7.008x41.339	16.12	35.539
	71 1060 1219	WRFR4 120 1x9 Primed	1x9	120x120	178x1180	7.008x46.457	18.08	39.851
	71 1060 1221	WRFR4 120 2x1 Primed	2x1	120x120	346x140	13.622x5.512	4.56	10.057
	71 1060 1222	WRFR4 120 2x2 Primed	2x2	120x120	356x270	14.016x10.630	9.47	20.869
	71 1060 1223	WRFR4 120 2x3 Primed	2x3	120x120	356x400	14.016x15.748	13.57	29.908
	71 1060 1224	WRFR4 120 2x4 Primed	2x4	120x120	356x530	14.016x20.866	18.07	39.833
	71 1060 1225	WRFR4 120 2x5 Primed	2x5	120x120	356x660	14.016x25.984	22.57	49.758
	71 1060 1226	WRFR4 120 2x6 Primed	2x6	120x120	356x790	14.016x31.102	27.07	59.684
	71 1060 1227	WRFR4 120 2x7 Primed	2x7	120x120	356x920	14.016x36.221	31.57	69.609
	71 1060 1228	WRFR4 120 2x8 Primed	2x8	120x120	356x1050	14.016x41.339	36.08	79.543
	71 1060 1231	WRFR4 120 3x1 Primed	3x1	120x120	514x140	20.236x5.512	6.70	14.762
	71 1060 1232	WRFR4 120 3x2 Primed	3x2	120x120	534x270	21.220x10.630	14.49	31.952
	71 1060 1233	WRFR4 120 3x3 Primed	3x3	120x120	534x400	21.220x15.748	20.64	45.508
	71 1060 1234	WRFR4 120 3x4 Primed	3x4	120x120	534x530	21.220x20.866	27.62	60.881
	71 1060 1235	WRFR4 120 3x5 Primed	3x5	120x120	534x660	21.220x25.984	34.59	76.254
	71 1060 1236	WRFR4 120 3x6 Primed	3x6	120x120	534x790	21.220x31.102	41.56	91.626
	71 1060 1811	WRFR4 180 1x1 Primed	1x1	180x120	238x140	9.370x5.512	2.99	6.592
	71 1060 1812	WRFR4 180 1x2 Primed	1x2	180x120	238x270	9.370x10.630	5.23	11.530
	71 1060 1813	WRFR4 180 1x3 Primed	1x3	180x120	238x400	9.370x15.748	7.46	16.446
	71 1060 1814	WRFR4 180 1x4 Primed	1x4	180x120	238x530	9.370x20.866	9.70	21.374
	71 1060 1815	WRFR4 180 1x5 Primed	1x5	180x120	238x660	9.370x26.984	11.93	26.301
	71 1060 1816	WRFR4 180 1x6 Primed	1x6	180x120	238x790	9.370x31.102	14.17	31.228
	71 1060 1817	WRFR4 180 1x7 Primed	1x7	180x120	238x920	9.370x36.221	16.40	36.156
	71 1060 1818	WRFR4 180 1x8 Primed	1x8	180x120	238x1050	9.370x41.339	18.64	41.083

WMR series

PICTURE DISEGNO	CODE CODICE	ARTICLE ARTICOLO	OPENINGS APERTURE TELAIO	PACKING SPACE SPAZIO DI RIEMPIMENTO	DIMENSIONI ESTERNE NOMINALI HxW (D=60mm)		WEIGHT PESO	
				mm	mm	in	kg	lb
	71 1060 1819	WRFR4 180 1x9 Primed	1x9	180x120	238x1180	9.370x46.457	20.87	46.010
	71 1060 1821	WRFR4 180 2x1 Primed	2x1	180x120	466x140	18.347x5.512	5.69	12.533
	71 1060 1822	WRFR4 180 2x2 Primed	2x2	180x120	476x270	18.740x10.630	11.15	24.584
	71 1060 1823	WRFR4 180 2x3 Primed	2x3	180x120	476x400	18.740x15.748	15.81	34.862
	71 1060 1824	WRFR4 180 2x4 Primed	2x4	180x120	476x530	18.740x20.866	20.88	46.026
	71 1060 1825	WRFR4 180 2x5 Primed	2x5	180x120	476x660	18.740x25.984	25.94	57.190
	71 1060 1826	WRFR4 180 2x6 Primed	2x6	180x120	476x790	18.740x31.102	31.01	68.354
	71 1060 1827	WRFR4 180 2x7 Primed	2x7	180x120	476x920	18.740x36.221	36.07	79.519
	71 1060 1828	WRFR4 180 2x8 Primed	2x8	180x120	476x1050	18.740x41.339	41.13	90.683
	71 1060 1829	WRFR4 180 2x9 Primed	2x9	180x120	476x1180	18.740x46.457	46.20	101.847
	71 1060 1820	WRFR4 180 2x10 Primed	2x10	180x120	476x1310	18.740x51.575	51.26	113.011
	71 1060 1831	WRFR4 180 3x1 Primed	3x1	180x120	694x140	27.323x5.512	8.83	19.469
	71 1060 2411	WRFR4 240 1x1 Primed	1x1	240x120	298x140	11.732x5.512	3.55	7.829
	71 1060 2412	WRFR4 240 1x2 Primed	1x2	240x120	298x270	11.733x10.630	6.07	13.382
	71 1060 2413	WRFR4 240 1x3 Primed	1x3	240x120	298x400	11.732x15.748	8.59	18.938
	71 1060 2414	WRFR4 240 1x4 Primed	1x4	240x120	298x530	11.732x20.866	11.11	24.492
	71 1060 2415	WRFR4 240 1x5 Primed	1x5	240x120	298x660	11.732x25.984	13.63	30.047
	71 1060 2416	WRFR4 240 1x6 Primed	1x6	240x120	298x790	11.732x31.102	16.15	35.601
	71 1060 2421	WRFR4 240 2x1 Primed	2x1	240x120	586x140	23.071x5.512	6.81	15.009
	71 1060 2422	WRFR4 240 2x2 Primed	2x2	240x120	596x270	23.465x10.630	12.84	28.299
	71 1060 2423	WRFR4 240 2x3 Primed	2x3	240x120	596x400	23.465x15.748	18.06	39.813
	71 1060 2424	WRFR4 240 2x4 Primed	2x4	240x120	596x530	23.465x20.866	23.68	52.215
	71 1060 2425	WRFR4 240 2x5 Primed	2x5	240x120	596x660	23.465x25.984	29.31	64.618
	71 1060 2426	WRFR4 240 2x6 Primed	2x6	240x120	596x790	23.465x31.102	34.94	77.020
	71 1060 2427	WRFR4 240 2x7 Primed	2x7	240x120	596x920	23.465x36.221	40.56	89.422
	71 1060 2428	WRFR4 240 2x8 Primed	2x8	240x120	596x1060	23.465x41.339	46.19	101.824
	71 1060 2429	WRFR4 240 2x9 Primed	2x9	240x120	596x1180	23.465x46.457	51.81	114.226
	71 1060 2420	WRFR4 240 2x10 Primed	2x10	240x120	596x1310	23.465x51.575	57.44	126.628
	71 1060 2431	WRFR4 240 3x1 Primed	3x1	240x120	874x140	34.409x5.512	10.07	22.190
	71 1061 1211	WRFR4 120 1x1 AISI 316	1x1	120x120	178x140	7.008x5.512	2.49	5.490
	71 1061 1212	WRFR4 120 1x2 AISI 316	1x2	120x120	178x270	7.008x10.630	4.55	10.040

WMR series

PICTURE DISEGNO	CODE CODICE	ARTICLE ARTICOLO	OPENINGS APERTURE TELAIO	PACKING SPACE SPAZIO DI RIEMPIMENTO	DIMENSIONI ESTERNE NOMINALI HxW (D=60mm)		WEIGHT PESO	
				mm	mm	in	kg	lb
	71 1061 1213	WRFR4 120 1x3 AISI 316	1x3	120x120	178x400	7.008x15.748	6.66	14.674
	71 1061 1214	WRFR4 120 1x4 AISI 316	1x4	120x120	178x530	7.008x20.866	8.74	19.266
	71 1061 1215	WRFR4 120 1x5 AIS I316	1x5	120x120	178x660	7.008x25.984	10.82	23.858
	71 1061 1216	WRFR4 120 1x6 AISI 316	1x6	120x120	178x790	7.008x31.102	12.91	28.451
	71 1061 1221	WRFR4 120 2x1 AISI 316	2x1	120x120	346x140	13.622x5.512	4.68	10.315
	71 1061 1231	WRFR4 120 3x1 AISI 316	3x1	120x120	514x140	20.236x5.512	6.87	14.674
	71 1061 1811	WRFR4 180 1x1 AISI 316	1x1	180x120	238x140	9.370x5.512	3.07	6.768
	71 1061 1812	WRFR4 180 1x2 AISI 316	1x2	180x120	238x270	9.370x10.630	5.36	11.817
	71 1061 1813	WRFR4 180 1x3 AISI 316	1x3	180x120	238x400	9.370x15.748	9.94	21.914
	71 1061 1814	WRFR4 180 1x4 AISI 316	1x4	180x120	238x530	9.370x20.866	12.23	26.963
	71 1061 1815	WRFR4 180 1x5 AISI 316	1x5	180x120	238x660	9.370x26.984	14.52	32.011
	71 1061 1816	WRFR4 180 1x6 AISI 316	1x6	180x120	238x790	9.370x31.102	16.81	37.060
	71 1061 1821	WRFR4 180 2x1 AISI 316	2x1	180x120	466x140	18.347x5.512	5.83	12.855
	71 1061 2411	WRFR4 240 1x1 AISI 316	1x1	240x120	298x140	11.732x5.512	3.64	8.025
	71 1061 2412	WRFR4 240 1x2 AISI 316	1x2	240x120	298x270	11.733x10.630	6.22	13.713
	71 1061 2413	WRFR4 240 1x3 AISI 316	1x3	240x120	298x400	11.732x15.748	8.81	19.423
	71 1061 2414	WRFR4 240 1x4 AISI 316	1x4	240x120	298x530	11.732x20.866	11.40	25.122
	71 1061 2415	WRFR4 240 1x5 AISI 316	1x5	240x120	298x660	11.732x25.984	13.98	30.821
	71 1061 2416	WRFR4 240 1x6 AISI 316	1x6	240x120	298x790	11.732x31.102	16.57	36.520
	71 1061 2421	WRFR4 240 2x1 AISI 316	2x1	240x120	586x140	23.071x5.512	6.98	15.39
	71 1061 2431	WRFR4 240 3x1 AISI 316	3x1	240x120	874x140	34.409x5.512	10.32	22.76
	71 1062 1211	WRFR4 120 1x1 AL	1x1	120x120	178x140	7.008x5.512	0.84	1.852
	71 1062 1212	WRFR4 120 1x2 AL	1x2	120x120	178x270	7.008x10.630	1.52	3.351
	71 1062 1213	WRFR4 120 1x3 AL	1x3	120x120	178x400	7.008x15.748	2.25	4.960
	71 1062 1214	WRFR4 120 1x4 AL	1x4	120x120	178x530	7.008x20.866	2.93	6.449
	71 1062 1215	WRFR4 120 1x5 AL	1x5	120x120	178x660	7.008x25.984	3.60	7.937
	71 1062 1216	WRFR4 120 1x6 AL	1x6	120x120	178x790	7.008x31.102	4.28	9.425
	71 1062 1221	WRFR4 120 2x1 AL	2x1	120x120	346x140	13.622x5.512	1.58	3.481
	71 1062 1222	WRFR4 120 2x2 AL	2x2	120x120	356x270	14.016x10.630	3.28	7.225
	71 1062 1223	WRFR4 120 2x3 AL	2x3	120x120	356x400	14.016x15.748	4.70	10.353
	71 1062 1224	WRFR4 120 2x4 AL	2x4	120x120	356x530	14.016x20.866	6.25	13.789

WMR series

PICTURE DISEGNO	CODE CODICE	ARTICLE ARTICOLO	OPENINGS APERTURE TELAIO	PACKING SPACE SPAZIO DI RIEMPIMENTO	DIMENSIONI ESTERNE NOMINALI HxW (D=60mm)		WEIGHT PESO	
				mm	mm	in	kg	lb
	71 1062 1231	WRFR4 120 3x1 AL	3x1	120x120	514x140	20.236x5.512	2.32	5.110
	71 1062 1811	WRFR4 180 1x1 AL	1x1	180x120	238x140	9.370x5.512	1.03	2.271
	71 1062 1812	WRFR4 180 1x2 AL	1x2	180x120	238x270	9.370x10.630	1.81	3.990
	71 1062 1813	WRFR4 180 1x3 AL	1x3	180x120	238x400	9.370x15.748	2.58	5.688
	71 1062 1814	WRFR4 180 1x4 AL	1x4	180x120	238x530	9.370x20.866	3.36	7.397
	71 1062 1815	WRFR4 180 1x5 AL	1x5	180x120	238x660	9.370x26.984	4.13	9.105
	71 1062 1816	WRFR4 180 1x6 AL	1x6	180x120	238x790	9.370x31.102	4.91	10.814
	71 1062 1821	WRFR4 180 2x1 AL	2x1	180x120	466x140	18.347x5.512	1.97	4.339
	71 1062 1822	WRFR4 180 2x2 AL	2x2	180x120	476x270	18.740x10.630	3.86	8..510
	71 1062 1823	WRFR4 180 2x3 AL	2x3	180x120	476x400	18.740x15.748	5.47	12.068
	71 1062 1824	WRFR4 180 2x4 AL	2x4	180x120	476x530	18.740x20.866	7.23	15.933
	71 1062 1825	WRFR4 180 2x5 AL	2x5	180x120	476x660	18.740x25.984	8.98	19.798
	71 1062 1826	WRFR4 180 2x6 AL	2x6	180x120	476x790	18.740x31.102	10.73	23.662
	71 1062 1831	WRFR4 180 3x1 AL	3x1	180x120	694x140	27.323x5.512	2.90	6.396
	71 1062 2411	WRFR4 240 1x1 AL	1x1	240x120	298x140	11.732x5.512	1.23	2.712
	71 1062 2412	WRFR4 240 1x2 AL	1x2	240x120	298x270	11.733x10.630	2.10	4.630
	71 1062 2413	WRFR4 240 1x3 AL	1x3	240x120	298x400	11.732x15.748	2.97	6.548
	71 1062 2414	WRFR4 240 1x4 AL	1x4	240x120	298x530	11.732x20.866	3.84	8.466
	71 1062 2415	WRFR4 240 1x5 AL	1x5	240x120	298x660	11.732x25.984	4.71	10.384
	71 1062 2416	WRFR4 240 1x6 AL	1x6	240x120	298x790	11.732x31.102	5.58	12.302
	71 1062 2421	WRFR4 240 2x1 AL	2x1	240x120	586x141	23.071x5.512	2.36	5.203
	71 1062 2431	WRFR4 240 3x1 AL	3x1	240x120	874x141	34.409x5.512	3.48	7.681



WallMax® Rectangular Frame Rounded

WRFR6 frames are used in combination with WMR series modules and accessories to achieve customized sealing solutions.
The numerous combinations of openings and packing space allow for development of cable transit solutions specific to customer's needs.

Cornice Rettangolare Arrotondata WallMax®

Le cornici WRFR6 sono utilizzati in combinazione con i moduli e gli accessori della gamma WMR per offrire soluzioni di sigillatura personalizzate.
Sono disponibili varie combinazioni di aperture e dimensioni con le quali si possono ottenere differenti soluzioni di passaggio cavi, a seconda delle specifiche necessità del cliente.

MATERIALS	MATERIALI
Primed Steel	Acciaio con prima mano antiruggine
SS AISI 316 L	Acciaio inox resistente agli acidi
Aluminium	Alluminio
Other materials available upon request	Disponibile in altri materiali su richiesta



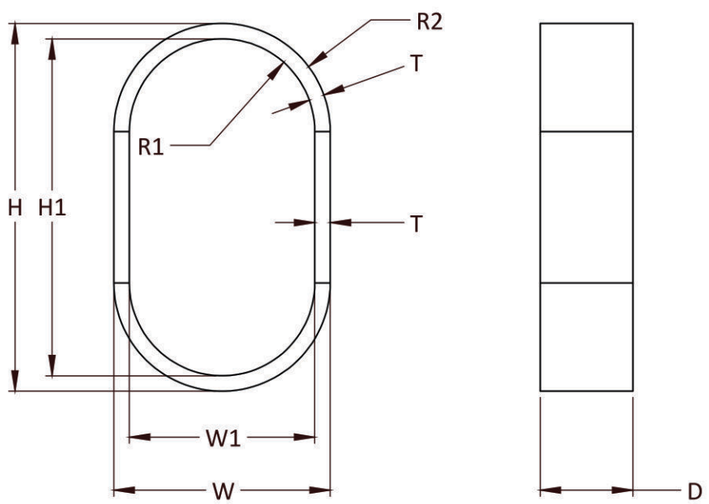

POS	(mm)	(inches)
H1	H-20	H-0.787
W1	W-20	W-0.787
T	10	0.394
D	60	2.362
R1	R60	R2.362
R2	R70	R2.756

To be used in combination with/utilizzate in combinazione con

WMR series

PICTURE DISEGNO	CODE CODICE	ARTICLE ARTICOLO	OPENINGS APERTURE TELAIO	PACKING SPACE SPAZIO DI RIEMPIMENTO	EXTERNAL NOMINAL DIMENSIONS DIMENSIONI ESTERNE NOMINALI HxW (D=60mm)		WEIGHT PESO	
				mm	mm	in	kg	lb
	71 1430 1811	WRFR6 180 1x1 Primed	1x1	180x120	238x140	9.370x5.512	2.83	6.237
	71 1430 1812	WRFR6 180 1x2 Primed	1x2	180x120	238x270	9.370x10.630	5.20	11.131
	71 1430 1813	WRFR6 180 1x3 Primed	1x3	180x120	238x400	9.370x15.748	7.27	16.025
	71 1430 1814	WRFR6 180 1x4 Primed	1x4	180x120	238x530	9.370x20.866	9.48	20.920
	71 1430 1815	WRFR6 180 1x5 Primed	1x5	180x120	238x660	9.370x26.984	11.71	25.814
	71 1430 1816	WRFR6 180 1x6 Primed	1x6	180x120	238x790	9.370x31.102	13.93	30.708
	71 1430 1817	WRFR6 180 1x7 Primed	1x7	180x120	238x920	9.370x36.221	16.15	35.602
	71 1430 1818	WRFR6 180 1x8 Primed	1x8	180x120	238x1050	9.370x41.339	18.37	40.497
	71 1430 1819	WRFR6 180 1x9 Primed	1x9	180x120	238x1180	9.370x46.457	20.59	45.391
	71 1430 1821	WRFR6 180 2x1 Primed	2x1	180x120	466x140	18.347x5.512	5.52	12.178
	71 1430 1822	WRFR6 180 2x2 Primed	2x2	180x120	476x270	18.740x10.630	11.03	24.313
	71 1430 1823	WRFR6 180 2x3 Primed	2x3	180x120	476x400	18.740x15.748	15.69	34.588
	71 1430 1824	WRFR6 180 2x4 Primed	2x4	180x120	476x530	18.740x20.866	20.77	45.793
	71 1430 1825	WRFR6 180 2x5 Primed	2x5	180x120	476x660	18.740x25.984	25.85	56.998
	71 1430 1826	WRFR6 180 2x6 Primed	2x6	180x120	476x790	18.740x31.102	30.94	68.203
	71 1430 1827	WRFR6 180 2x7 Primed	2x7	180x120	476x920	18.740x36.221	36.02	79.408
	71 1430 1828	WRFR6 180 2x8 Primed	2x8	180x120	476x1050	18.740x41.339	41.10	90.613
	71 1430 1829	WRFR6 180 2x9 Primed	2x9	180x120	476x1180	18.740x46.457	46.18	101.818
	71 1430 1820	WRFR6 180 2x10 Primed	2x10	180x120	476x1310	18.740x51.575	51.27	113.023
	71 1430 1831	WRFR6 180 3x1 Primed	3x1	180x120	694x140	27.323x5.512	8.22	18.122
	71 1430 2411	WRFR6 240 1x1 Primed	1x1	240x120	298x140	11.732x5.512	3.39	7.474
	71 1430 2412	WRFR6 240 1x2 Primed	1x2	240x120	298x270	11.733x10.630	5.91	13.027
	71 1430 2413	WRFR6 240 1x3 Primed	1x3	240x120	298x400	11.732x15.748	8.43	18.581
	71 1430 2414	WRFR6 240 1x4 Primed	1x4	240x120	298x530	11.732x20.866	10.95	24.134
	71 1430 2415	WRFR6 240 1x5 Primed	1x5	240x120	298x660	11.732x25.984	13.45	29.643
	71 1430 2416	WRFR6 240 1x6 Primed	1x6	240x120	298x790	11.732x31.102	15.99	35.241
	71 1430 2421	WRFR6 240 2x1 Primed	2x1	240x120	586x140	23.071x5.512	6.65	14.656
	71 1430 2422	WRFR6 240 2x2 Primed	2x2	240x120	596x270	23.465x10.630	12.71	28.027
	71 1430 2423	WRFR6 240 2x3 Primed	2x3	240x120	596x400	23.465x15.748	17.94	39.542
	71 1430 2424	WRFR6 240 2x4 Primed	2x4	240x120	596x530	23.465x20.866	23.58	51.985

WMR series

PICTURE DISEGNO	CODE CODICE	ARTICLE ARTICOLO	OPENINGS APERTURE TELAIO	PACKING SPACE SPAZIO DI RIEMPIMENTO mm	EXTERNAL NOMINAL DIMENSIONS DIMENSIONI ESTERNE NOMINALI HxW (D=60mm) mm	 in	WEIGHT PESO kg	 lb
	71 1430 2425	WRFR6 240 2x5 Primed	2x5	240x120	596x660	23.465x25.984	29.22	64.428
	71 1430 2426	WRFR6 240 2x6 Primed	2x6	240x120	596x790	23.465x31.102	34.87	76.871
	71 1430 2427	WRFR6 240 2x7 Primed	2x7	240x120	596x920	23.465x36.221	40.51	89.314
	71 1430 2428	WRFR6 240 2x8 Primed	2x8	240x120	596x1430	23.465x41.339	46.16	101.757
	71 1430 2429	WRFR6 240 2x9 Primed	2x9	240x120	596x1180	23.465x46.457	51.80	111.200
	71 1430 2420	WRFR6 240 2x10 Primed	2x10	240x120	596x1310	23.465x51.575	57.44	126.642
	71 1430 2431	WRFR6 240 3x1 Primed	3x1	240x120	874x140	34.409x5.512	9.91	21.837
	71 1431 1811	WRFR6 180 1x1 AISI 316	1x1	180x120	238x140	9.370x5.512	2.90	6.396
	71 1431 1812	WRFR6 180 1x2 AISI 316	1x2	180x120	238x270	9.370x10.630	5.19	11.444
	71 1431 1813	WRFR6 180 1x3 AISI 316	1x3	180x120	238x400	9.370x15.748	7.48	16.493
	71 1431 1814	WRFR6 180 1x4 AISI 316	1x4	180x120	238x530	9.370x20.866	9.77	21.541
	71 1431 1815	WRFR6 180 1x5 AISI 316	1x5	180x120	238x660	9.370x26.984	12.06	26.590
	71 1431 1816	WRFR6 180 1x6 AISI 316	1x6	180x120	238x790	9.370x31.102	14.35	31.639
	71 1431 1821	WRFR6 180 2x1 AISI 316	2x1	180x120	466x140	18.347x5.512	5.67	12.491
	71 1431 2411	WRFR6 240 1x1 AISI 316	1x1	240x120	298x140	11.732x5.512	3.48	7.665
	71 1431 2412	WRFR6 240 1x2 AISI 316	1x2	240x120	298x270	11.733x10.630	6.06	13.353
	71 1431 2413	WRFR6 240 1x3 AISI 316	1x3	240x120	298x400	11.732x15.748	8.64	19.041
	71 1431 2414	WRFR6 240 1x4 AISI 316	1x4	240x120	298x530	11.732x20.866	11.22	24.729
	71 1431 2415	WRFR6 240 1x5 AISI 316	1x5	240x120	298x660	11.732x25.984	13.80	30.417
	71 1431 2416	WRFR6 240 1x6 AISI 316	1x6	240x120	298x790	11.732x31.102	16.38	36.105
	71 1431 2421	WRFR6 240 2x1 AISI 316	2x1	240x120	586x140	23.071x5.512	6.82	15.031
	71 1431 2431	WRFR6 240 3x1 AISI 316	3x1	240x120	874x140	34.409x5.512	10.16	22.397
	71 1432 1811	WRFR6 180 1x1 AL	1x1	180x120	238x140	9.370x5.512	0.98	2.158
	71 1432 1812	WRFR6 180 1x2 AL	1x2	180x120	238x270	9.370x10.630	1.76	3.878
	71 1432 1813	WRFR6 180 1x3 AL	1x3	180x120	238x400	9.370x15.748	2.54	5.598
	71 1432 1814	WRFR6 180 1x4 AL	1x4	180x120	238x530	9.370x20.866	3.32	7.317
	71 1432 1815	WRFR6 180 1x5 AL	1x5	180x120	238x660	9.370x26.984	4.10	9.037
	71 1432 1816	WRFR6 180 1x6 AL	1x6	180x120	238x790	9.370x31.102	4.88	10.756
	71 1432 1821	WRFR6 180 2x1 AL	2x1	180x120	466x140	18.347x5.512	1.91	4.215
	71 1432 1822	WRFR6 180 2x2 AL	2x2	180x120	476x270	18.740x10.630	3.82	8.415

WMR series

PICTURE DISEGNO	CODE CODICE	ARTICLE ARTICOLO	OPENINGS APERTURE TELAIO	PACKING SPACE SPAZIO DI RIEMPIMENTO mm	EXTERNAL NOMINAL DIMENSIONS DIMENSIONI ESTERNE NOMINALI HxW (D=60mm) mm	 in	WEIGHT PESO kg	 lb
	71 1432 1823	WRFR6 180 2x3 AL	2x3	180x120	476x400	18.740x15.748	5.43	11.973
	71 1432 1824	WRFR6 180 2x4 AL	2x4	180x120	476x530	18.740x20.866	7.19	15.852
	71 1432 1825	WRFR6 180 2x5 AL	2x5	180x120	476x660	18.740x25.984	8.95	19.731
	71 1432 1826	WRFR6 180 2x6 AL	2x6	180x120	476x790	18.740x31.102	10.71	23.610
	71 1432 1831	WRFR6 180 3x1 AL	3x1	180x120	694x140	27.323x5.512	2.85	6.272
	71 1432 2411	WRFR6 240 1x1 AL	1x1	240x120	298x140	11.732x5.512	1.17	2.588
	71 1432 2412	WRFR6 240 1x2 AL	1x2	240x120	298x270	11.733x10.630	2.04	4.506
	71 1432 2413	WRFR6 240 1x3 AL	1x3	240x120	298x400	11.732x15.748	2.91	6.424
	71 1432 2414	WRFR6 240 1x4 AL	1x4	240x120	298x530	11.732x20.866	3.78	8.342
	71 1432 2415	WRFR6 240 1x5 AL	1x5	240x120	298x660	11.732x25.984	4.65	10.260
	71 1432 2416	WRFR6 240 1x6 AL	1x6	240x120	298x790	11.732x31.102	5.52	12.178
	71 1432 2421	WRFR6 240 2x1 AL	2x1	240x120	586x141	23.071x5.512	2.30	5.073
	71 1432 2431	WRFR6 240 3x1 AL	3x1	240x120	874x141	34.409x5.512	3.43	7.560