

WallMax® Rectangular Holed Flanged Frame

WRHFF frames are used in combination with WMR series and accessories to create personalized sealing solutions. Standard packing space allows for multiple combinations of WMR modules and a perfect fit to any customer's need.

Cornice Rettangolare con Flangia Forata WallMax®

Le cornici WRHFF sono da completare con i moduli della gamma WMR per ottenere soluzioni di sigillatura personalizzate. Sono possibili varie combinazioni di moduli di dimensioni differenti, a seconda delle necessità del cliente.

MATERIALS	MATERIALI
SS AISI 316 L	Acciaio inox resistente agli acidi
Galvanized Steel	Acciaio galvanizzato
Other materials available upon request	Disponibile in altri materiali su richiesta

DATASHEET PAGE: 161

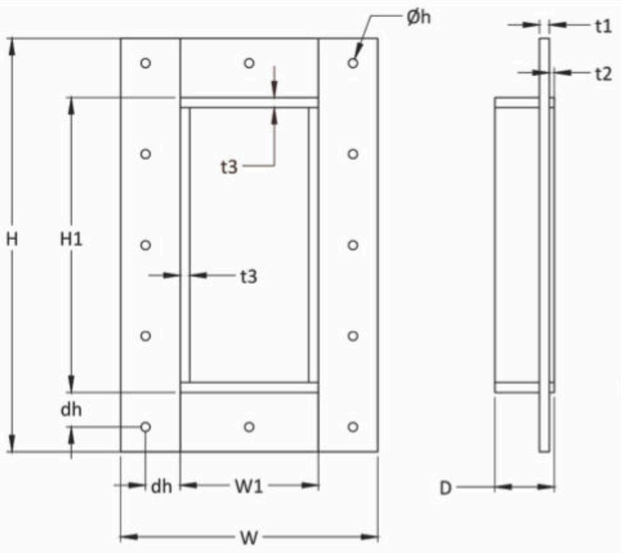

Pos.	(mm)	(inches)
H1	H-120	H-4.252
W1	W-120	W-4.724
D	60	2.362
f	60	2.362
t1	10	0.394
t2	5	0.197
t3	10	0.394
Øh	9	0.354
dh	35	1.378

Note: The holes pattern depends on the size

To be used in combination with/utilizzate in combinazione con

WMR series

PICTURE DISEGNO	CODE CODICE	ARTICLE ARTICOLO	OPENINGS APERTURE TELAIO	PACKING SPACE SPAZIO DI RIEMPIMENTO mm	EXTERNAL NOMINAL DIMENSIONS DIMENSIONI ESTERNE NOMINALI HxW (D=60mm) mm	 in	WEIGHT PESO kg	 lb
	71 1021 0611	WRHFF 60 1x1 AISI 316	1x1	60x120	238x260	9.370x10.236	5.87	12.948
	71 1021 0612	WRHFF 60 1x2 AISI 316	1x2	60x120	238x390	9.370x15.354	9.07	20.000
	71 1021 0613	WRHFF 60 1x3 AISI 316	1x3	60x120	238x520	9.370x20.472	12.27	27.053
	71 1021 1211	WRHFF 120 1x1 AISI 316	1x1	120x120	298x260	11.732x10.236	7.02	15.465
	71 1021 1212	WRHFF 120 1x2 AISI 316	1x2	120x120	298x390	11.732x20.472	10.43	22.983
	71 1021 1213	WRHFF 120 1x3 AISI 316	1x3	120x120	298x520	11.732x25.591	13.84	30.501
	71 1021 1811	WRHFF 180 1x1 AISI 316	1x1	180x120	358x260	14.095x10.236	8.16	17.983
	71 1021 1812	WRHFF 180 1x2 AISI 316	1x2	180x120	358x390	14.095x20.472	11.88	26.193
	71 1021 1813	WRHFF 180 1x3 AISI 316	1x3	180x120	358x520	14.095x25.591	15.61	34.403
	71 1021 2411	WRHFF 240 1x1 AISI 316	1x1	240x120	418x260	16.457x10.236	9.31	20.523
	71 1023 0611	WRHFF 60 1x1 Galv	1x1	60x120	238x260	9.370x10.236	5.73	12.624
	71 1023 0612	WRHFF 60 1x2 Galv	1x2	60x120	238x390	9.370x15.354	8.85	19.450
	71 1023 0613	WRHFF 60 1x3 Galv	1x3	60x120	238x520	9.370x20.472	11.96	26.376
	71 1023 1211	WRHFF 120 1x1 Galv	1x1	120x120	298x260	11.732x10.236	6.84	15.077
	71 1023 1212	WRHFF 120 1x2 Galv	1x2	120x120	298x390	11.732x15.354	10.25	22.595
	71 1023 1213	WRHFF 120 1x3 Galv	1x3	120x120	298x520	11.732x20.472	13.66	30.113
	71 1023 1811	WRHFF 180 1x1 Galv	1x1	180x120	358x260	14.095x10.236	7.95	17.533
	71 1023 1812	WRHFF 180 1x2 Galv	1x2	180x120	358x390	14.095x15.354	11.58	25.538
	71 1023 1813	WRHFF 180 1x3 Galv	1x3	180x120	358x520	14.095x20.472	13.66	30.113
	71 1023 2411	WRHFF 240 1x1 Galv	1x1	240x120	418x260	16.457x15.354	9.08	20.009